Aspa
ZGRZEWANIE

# KATALOG
## elektrod do zgrzewania oporowego

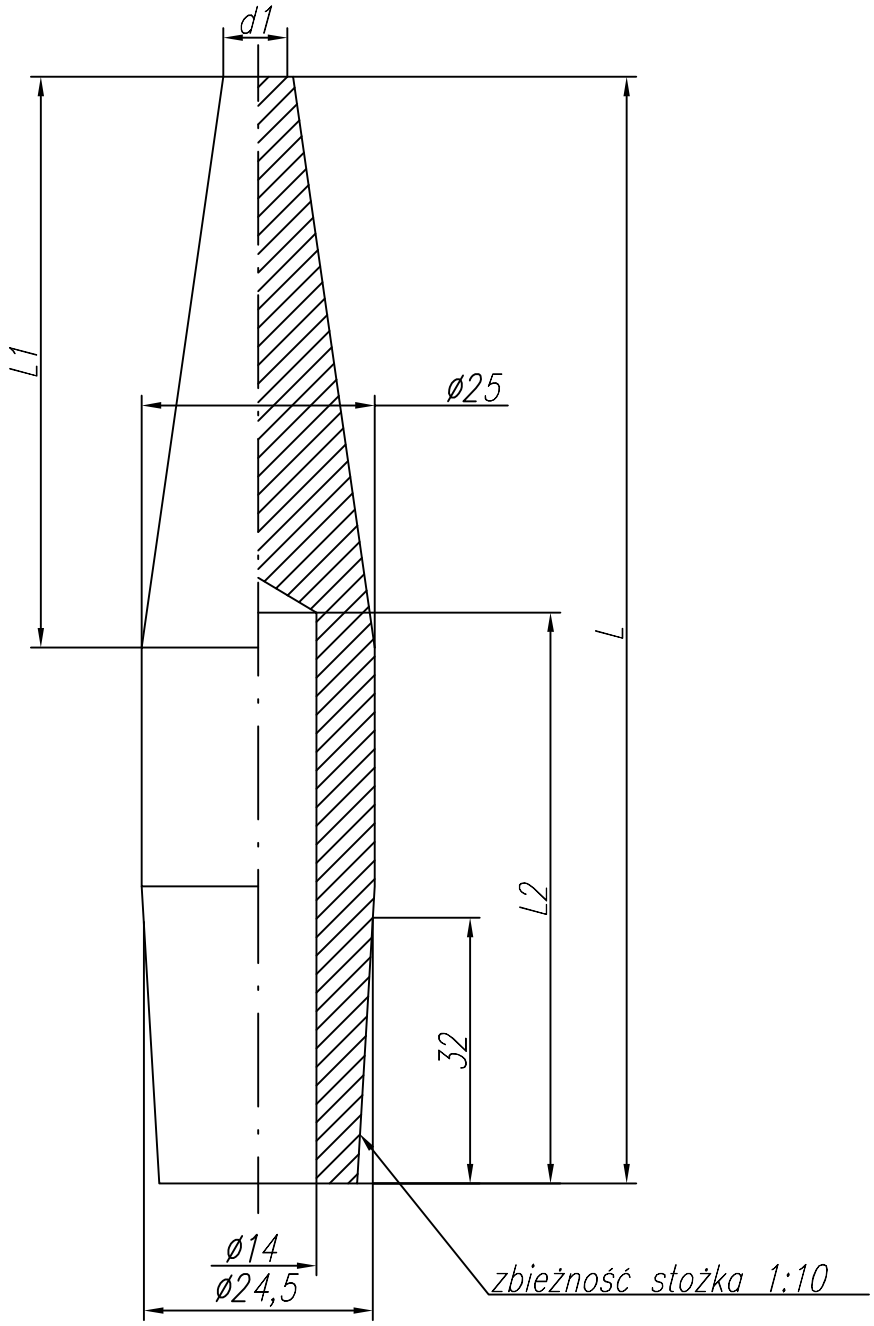


| Lp | L | L1 | d1 | L2 | | | Cecha | Nr rysunku |
|---|---|---|---|---|---|---|---|---|
| 1 | 125 | 70 | ø5 | 55 | | | A-20-0 | 2-9-1622-07-0 |
| 2 | 140 | 70 | ø8 | 70 | | | A-20-1 | 2-9-1622-07-1 |
| | | | | | | | | |
| | | | | | | | | |
| | | | | | | | | |
| | | | | | | | | |
| | | | | | | | | |
| | | | | | | | | |